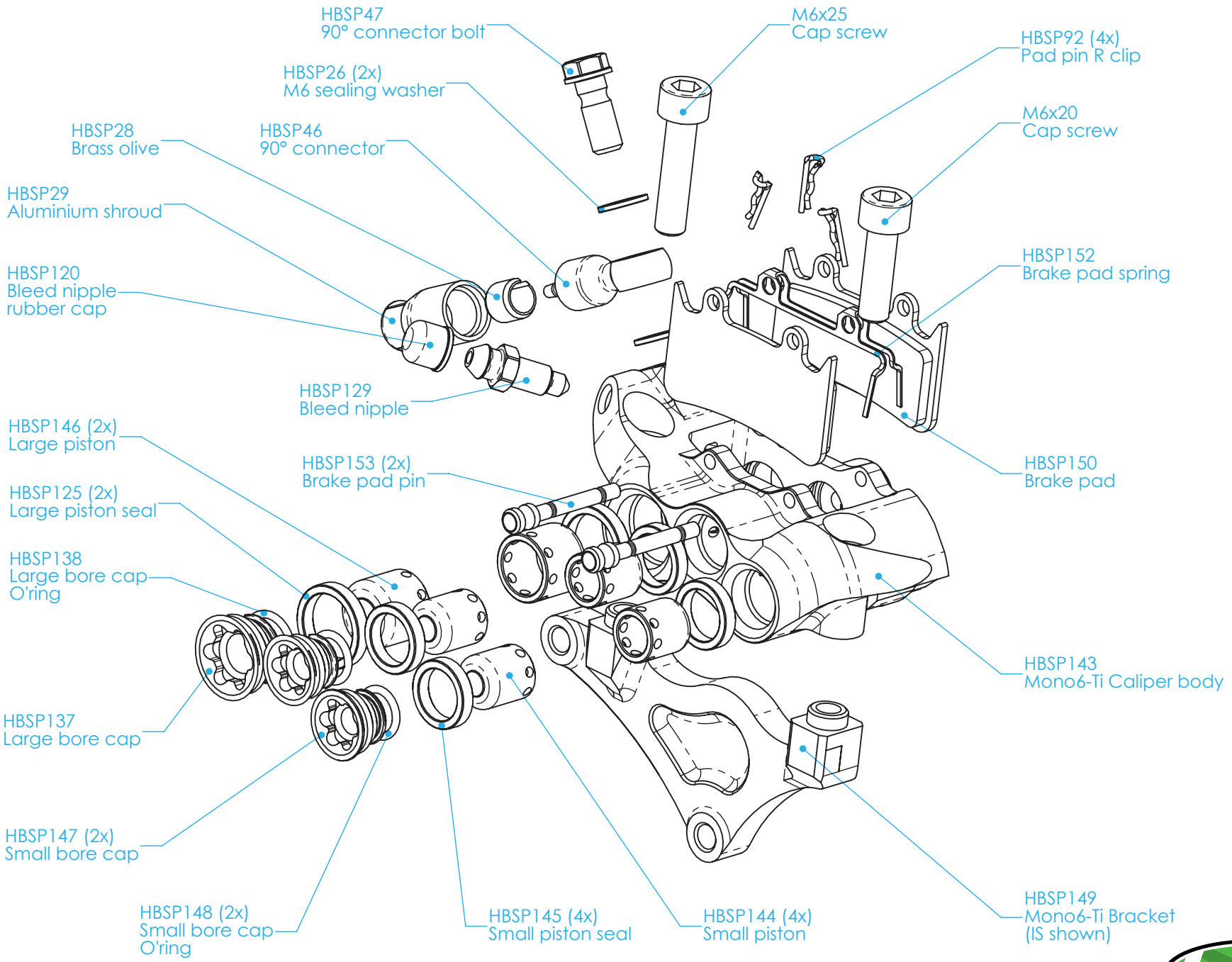
HBSP47
90° connector bolt
M6x25
Cap screw
HBSP92 (4x)
Pad pin R clip
HBSP26 (2x)
M6 sealing washer
M6x20
Cap screw
HBSP28
Brass olive
HBSP46
90° connector
HBSP29
Aluminium shroud
HBSP152
Brake pad spring
HBSP120
Bleed nipple
rubber cap
HBSP129
Bleed nipple
HBSP146 (2x)
Large piston
HBSP153 (2x)
Brake pad pin
HBSP150
Brake pad
HBSP125 (2x)
Large piston seal
HBSP138
Large bore cap
O'ring
HBSP143
Mono6-Ti Caliper body
HBSP137
Large bore cap
HBSP147 (2x)
Small bore cap
HBSP148 (2x)
Small bore cap
O'ring
HBSP145 (4x)
Small piston seal
HBSP144 (4x)
Small piston
HBSP149
Mono6-Ti Bracket
(IS shown)